Rotary cam switches

# BSW 819-494-12L3
# Order Code: BSW002F

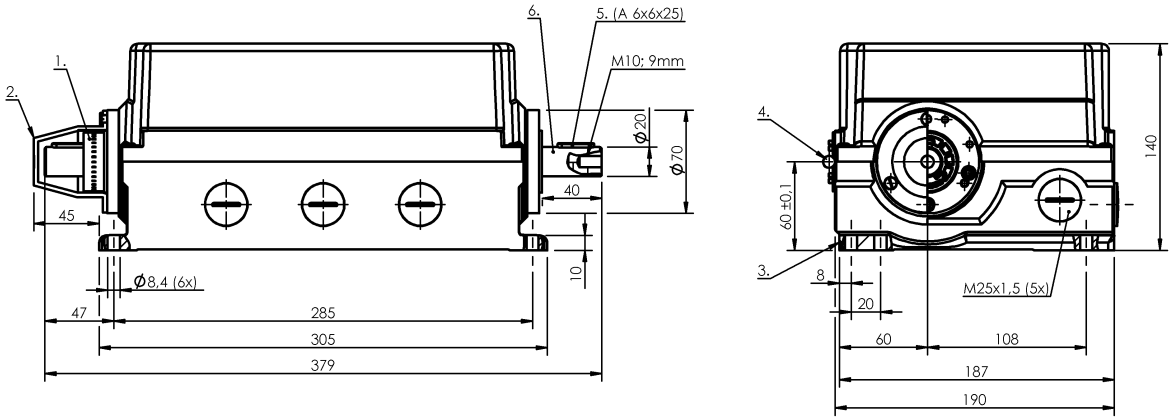


1) Scale ring, 2) Cover, 3) Reference edge, 4) Hinge, 5) Feather key, 6) Drive right-side

## Basic features

| | |
|---|---|
| **Approval/Conformity** | CE<br>UKCA<br>CCC<br>WEEE |
| **Basic standard** | IEC 60947-5-1 |
| **Operating principle** | 1. Switch position: Mechanical |
| **Version** | Snap contact |

## Electrical connection

| | |
|---|---|
| **Connection type** | 1. Switch position: Cable fitting via threaded insert |

## Electrical data

| | |
|---|---|
| **Cable entries, number** | 5 threaded exit M25 |
| **Continuous current** | 1-12. Switch position: 6 A |
| **Rated operating voltage Ue** | 1-12. Switch position: 500 V AC |
| **Speed max.** | 200 1/min |
| **Speed monitor** | None |

## Environmental conditions

| | |
|---|---|
| **Ambient temperature** | -5...80 °C |
| **IP rating** | IP65 |

## Functional safety

| | |
|---|---|
| **B10d (EN ISO 13849-1)** | BSE 67: 30 mil. switching cycles |
| **BG certified** | no |

## Material

| | |
|---|---|
| **Housing material** | Aluminium, Anodized |
| **Housing material, surface protection** | Anodized |
| **Material contacts** | 1-12. Switch position: Silver |

## Mechanical data

| | |
|---|---|
| **Cam rings** | 1-12. Switch position: 180° |
| **Cam rings can be secured** | no |
| **Connection cross-section** | 1.5 mm² |
| **Dimension** | 305 x 140 x 187 mm |
| **Drive shaft, length** | 40.00 mm |
| **Drive type** | right |
| **Life expectancy mechanical** | 1. Switch position: 30 mil. switching operations |
| **Minimum torque** | 2.0 Nm |
| **Mounting hold spacing B** | 285.0 mm |
| **Rotation direction monitoring** | no |
| **Switching element** | 1-12. Switch position: BSE 67 |

## Range/Distance

| | |
|---|---|
| **Opening angle min.** | 10° |
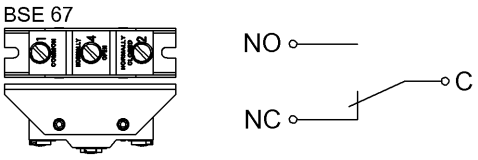
## Wiring Diagrams